University of Glasgow

James Watt School of Engineering

Degrees of MEng, BEng, MSc and BSc in Engineering

ENG4118 ROBOTICS 4

Wednesday, 03 May 2023, 09:30-11:30

Attempt ANY TWO questions from Section A and ANY TWO questions from Section B.

TOTAL MARKS AVAILABLE
60

The numbers in square brackets in the right-hand margin indicate the marks allotted to the part of the question against which the mark is shown. These marks are for guidance only.

PLEASE SEE BELOW FOR INSTRUCTIONS ON HOW TO ANSWER:
- Script books will NOT be used in this exam.
- You will be issued with four A3 double sided answer sheets.
- Answer only one question on each A3 answer sheet.
- Ensure you CLEARLY add your GUID and date of birth on each answer sheet. GUID goes on front and back.
- Continuation answer sheets (pink) are available on request. Please ensure you CLEARLY add your GUID, date of birth and question number to all continuation sheets. GUID goes on front and back.

OVER

SECTION A: [30 Marks]
Attempt ANY TWO questions from this section

Q1 (a) Explain what s*tatic response*, s*tability*, and *hysteresis* are with respect to sensors. Provide an example for each. [6]

(b) There is a requirement to develop a sensing system for a robot designed to clean solar panels. The robot needs requires information on the distance travelled across the panel and the velocity being travelled at. Recommend two different sensors, providing justification for your choices. [4]

(c) A mobile robot uses an optical triangulation system for obstacle detection with $\beta = 45°$.

(i) Sketch this system, indicating what each element of the system is and highlight the transmitter angle (α), the receiver angle (β) and the receiver (L). [2]

(ii) Given L = 0.2m and d = 0.1m, calculate β [3]

Q2 (a) Describe, with the use of a diagrams, how a cam can be used to transform rotational motion into linear motion. [6]

(b) For a gear train with four gears (Gear A: 25 Teeth, Gear B: 25 Teeth, Gear C: 20 Teeth and Gear D: 40 Teeth), calculate the speed (rev/min) at gear D and its direction if gear A is rotating clockwise at 25 rev/min. Note that Gear B and Gear C are on the same shaft. [4]

(c) A motor is required to perform a trapezoidal motion with an acceleration ramp of 1s, a constant speed of 150rpm for 2s and deceleration ramp of 1s. Sketch (including calculated values) the resultant instantaneous motor power over the complete trapezoidal move, given the system parameters outlined on Table Q2c. [5]

Parameter	**Value**
Motor Inertia (kg.m^2)	0.001
Motor Damping (Nm.s/rad)	negligible
Gear Ratio	10
Load Inertia (kg.m2)	0.25
Load Damping (Nm s/rad)	negligible
Fixed Load Torque (Nm)	5

Table Q2c

Continued overleaf

Q3 (a) It is required to have the joint of a robot arm move from an initial angle of 45° to a final angle of 50° in 5 seconds. Find the coefficients of a third order polynomial joint-space trajectory for this manoeuvre. Assume that the robot starts from rest and stops at the final position. Provide the final equations. [7]

(b) The robot arm is now to move from the previous final position (50°) to 55° in 10s. Using the following coefficients: c0 = 50, c1= 0, c2 = 0.152, c3 = -0.01, calculate the position and acceleration at 0s, 5s, and 10s. [4]

(c) Plot the acceleration of the robot arm against the position of the arm from 45° to 55°. Comment on the plot and on how to improve the result. The data for the plot can be calculated between 45° to 50° at 0s, 2.5s, and 5s. [4]

Continued overleaf

SECTION B: [30 Marks]
Attempt ANY TWO questions from this section

Q4. A robot manipulator is fitted with a RPY to actuate its end-effector. This Wrist joint configuration is to be replaced with an Euler Wrist end-effector. The new configuration must be able to attain the same orientation that the original RPY Wrist end-effector was able to achieve with the joint values shown in Table Q4a.

RPY Joint	Joint Symbol	Joint Values
Roll Revolute	ϕ_a	20°
Pitch Revolute	ϕ_o	04°
Yaw Revolute	ϕ_n	71°

Table Q4a

(a) By considering appropriate kinematic transformations, prove that the transformation matrix for the RPY end-effector described above can be represented thus:

$$T_{RPY} = \begin{bmatrix} C\phi_a C\phi_o & C\phi_a S\phi_o S\phi_n - S\phi_a C\phi_n & C\phi_a S\phi_o C\phi_n + S\phi_a S\phi_n & 0 \\ S\phi_a C\phi_o & S\phi_a S\phi_o S\phi_n + C\phi_a C\phi_n & S\phi_a S\phi_o C\phi_n - C\phi_a S\phi_n & 0 \\ -S\phi_o & C\phi_o S\phi_n & C\phi_o C\phi_n & 0 \\ 0 & 0 & 0 & 1 \end{bmatrix}$$

Here C = cos and S = sin. [2]

(b) Hence or otherwise, calculate the kinematic orientation of the RPY end-effector for the joint values given in Table Q4a. [2]

(c) Hence or otherwise, calculate the required joint variables for the replacement Euler end-effector that are associated with the orientation values calculated in part (b) above. [5]

(d) By using the values given in Table Q4b and an appropriate *Ziegler-Nichols* tuning method, calculate the gains for a Proportional-Integral-Derivative controller for controlling the Euler End-effector's revolute joints. [3]

Joint	Control Design Variables
Euler End-effector revolute	Critical gain, K_c = 25.7 Critical Period, T_c =0.45s

Table Q4b

(e) Describe how the kinematic transformation from part (a) can be used to control position of the end-effector's joints within a Joint Space Control scheme using Independent Joint Control. Illustrate your answer with an appropriate diagram. [3]

Continued overleaf

Q5. Figure Q5 depicts a robot manipulator that is used for collecting medicine for stores. It is connected to the wall and consists of 2 prismatic joints (joints 1 & 2) and 3 revolute joints (joints 3, 4 & 5). The end-effector gripper is connected to joint 5.

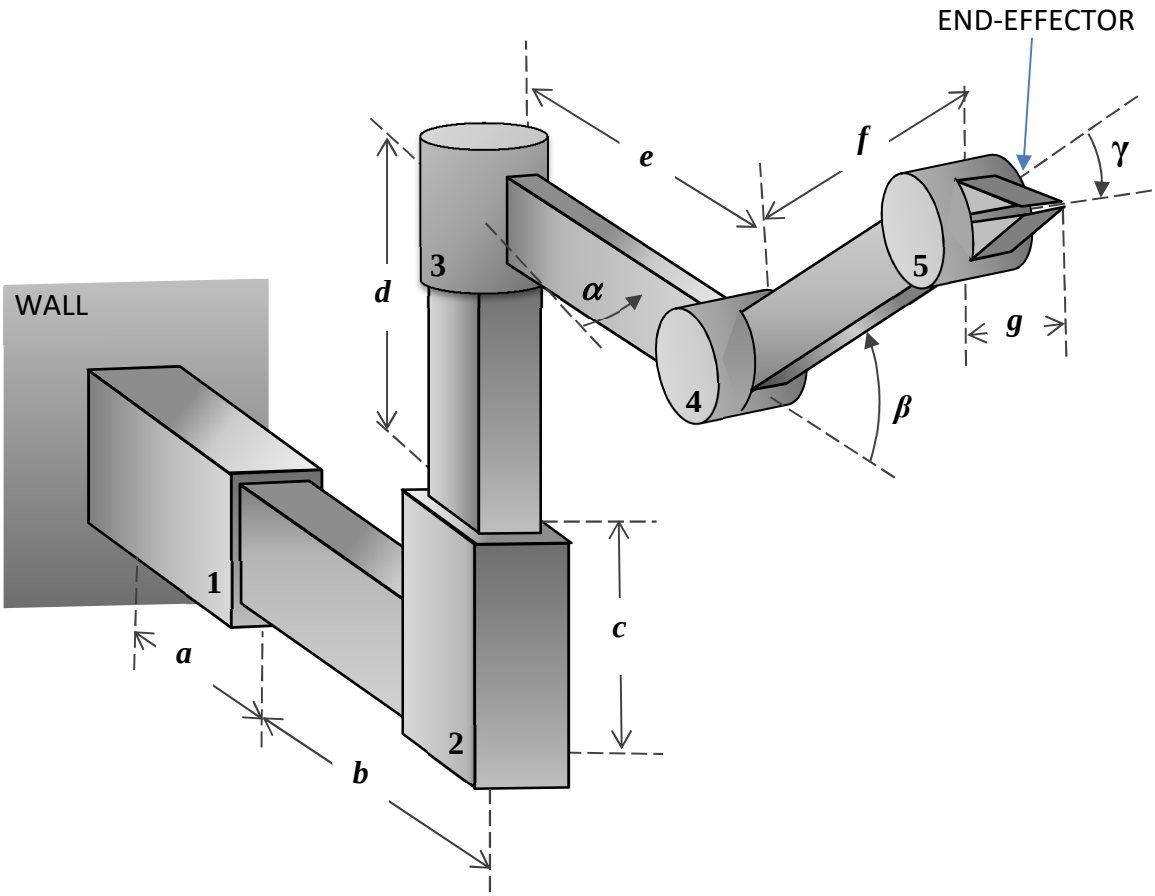

Figure Q5

(a) By considering the *Denavit-Hartenberg Representation*, define the direction of the x-z axes for the manipulator shown in Figure Q5. Illustrate your answer with an appropriate diagram. [3]

(b) Hence or otherwise, construct the *Denavit-Hartenberg Table* associated with the x-z axes defined in part (a). [3]

(c) Using the *Denavit-Hartenberg Transformation Matrix* and the table constructed in part (b), derive the kinematic transformation matrix ${}^{U}T_{H}$ for the manipulator end-effector tool shown in Figure Q5. [9]

Continued overleaf

Q6. The *Denavit-Hartenberg* transformation matrices below describe the successive joints from 1 to 5 for a particular position and orientation of a robot manipulator.

$$A_1 = \begin{bmatrix} 1 & 0 & 0 & 0 \\ 0 & 0 & -1 & 0 \\ 0 & 1 & 0 & 0.52 \\ 0 & 0 & 0 & 1 \end{bmatrix}, \; A_2 = \begin{bmatrix} C(63°) & 0 & S(63°) & 0.25\times C(63°) \\ S(63°) & 0 & C(63°) & 0.25\times S(63°) \\ 0 & -1 & 0 & -0.46 \\ 0 & 0 & 0 & 1 \end{bmatrix},$$

$$A_3 = \begin{bmatrix} -S(13°) & 0 & C(13°) & 0 \\ C(13°) & 0 & S(13°) & 0 \\ 0 & 1 & 0 & 0 \\ 0 & 0 & 0 & 1 \end{bmatrix}, A_4 = \begin{bmatrix} 1 & 0 & 0 & 0 \\ 0 & -1 & 0 & 0 \\ 0 & 0 & -1 & 0.37 \\ 0 & 0 & 0 & 1 \end{bmatrix},$$

$$A_5 = \begin{bmatrix} C(87°) & S(87°) & 0 & 0 \\ S(87°) & -C(87°) & 0 & 0 \\ 0 & 0 & -1 & -0.11 \\ 0 & 0 & 0 & 1 \end{bmatrix}$$

Here C = cos and S = sin. Joints 2, 3 and 5 are revolute. Joints 1 and 4 are prismatic. In addition to these transformations, the end-effector is a gripper of length 0.09m and is aligned along the axis of rotation of joint 5 (i.e. the z-axis only).

(a) Derive the T6 Jacobian for the robot manipulator's end-effector defined by the transformation matrices given above. Hint: consider there to be a sixth joint that represents the end-effector gripper as a prismatic joint.

[13]

(b) Hence or otherwise, calculate the resulting differential motion of the end-effector from the following differential motions of the joints:

$D\theta = [0.02, -2.5, 1.3, 0.04, 3.1, 0]^T$ [2]

End of question paper